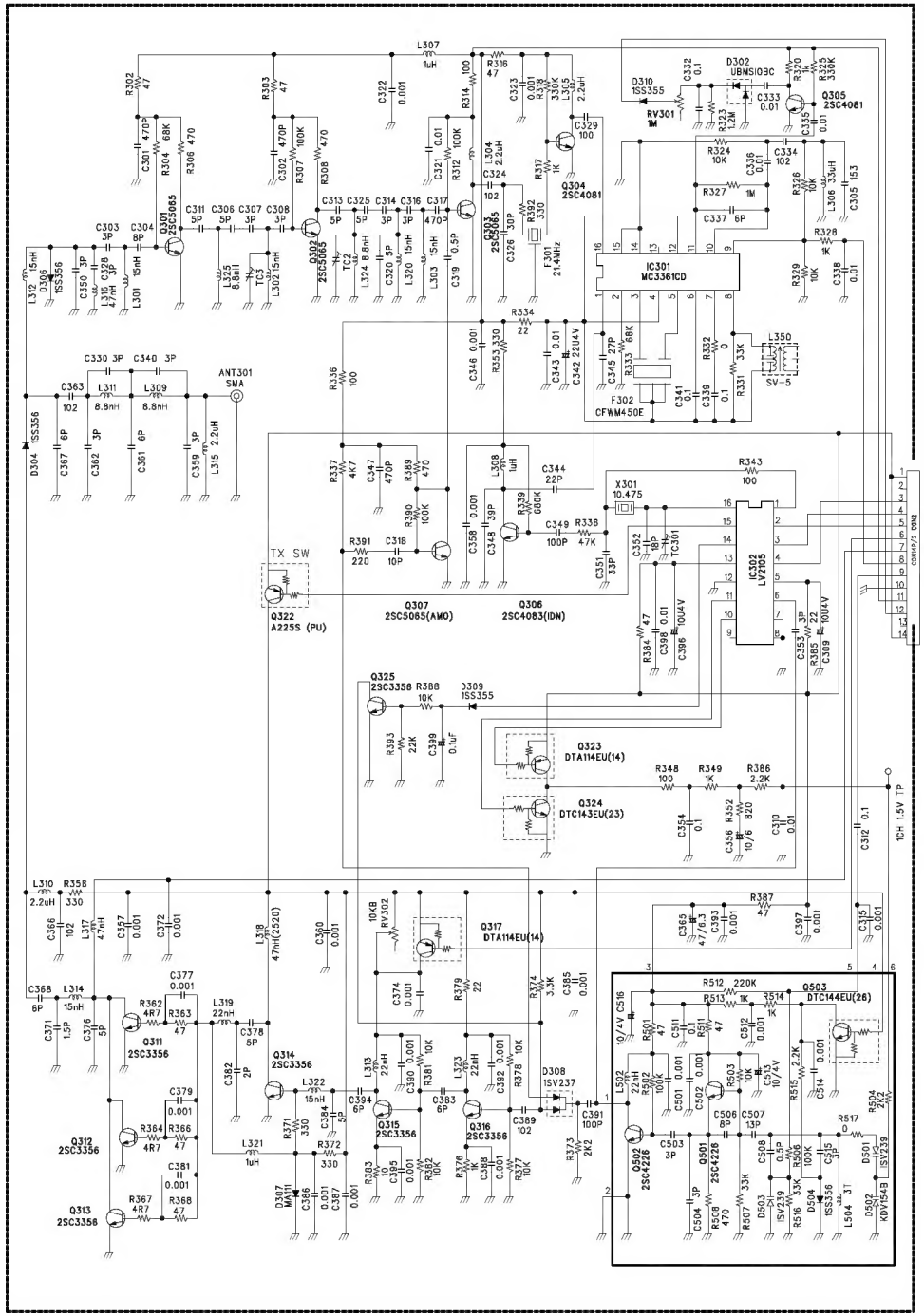
IC301
MC3361CD
IC302
LV2105
Q301
2SC5065
Q302
2SC5065
Q303
2SC5065
Q304
2SC4081
Q305
2SC4081
D302
UBMSIOBC
D310
1SS355
RV301
1M
F301
21.4MHz
F302
CFWM450E
L350
SV-5
ANT301
SMA
X301
10.475
TX SW
Q322
A225S (PU)
Q307
2SC5065(AMO)
Q306
2SC4083(IDN)
Q325
2SC3358
D309
1SS355
Q323
DTA114EU(14)
Q324
DTC143EU(23)
Q317
DTA114EU(14)
Q311
2SC3356
Q312
2SC3356
Q313
2SC3356
Q314
2SC3356
Q315
2SC3356
Q316
2SC3356
Q503
DTC144EU(26)
Q502
2SC4226
Q501
2SC4226
D308
1SV237
D501
1SV239
D502
KDV154B
+B 3.0V
DE
DI
CL
/PW/LOW
+B 4.5V
DET
MOD
RX B+ SAVE
SQ DET
CONVERTS TO LOW
CONVERTS TO HIGH
10H 1.5V TP

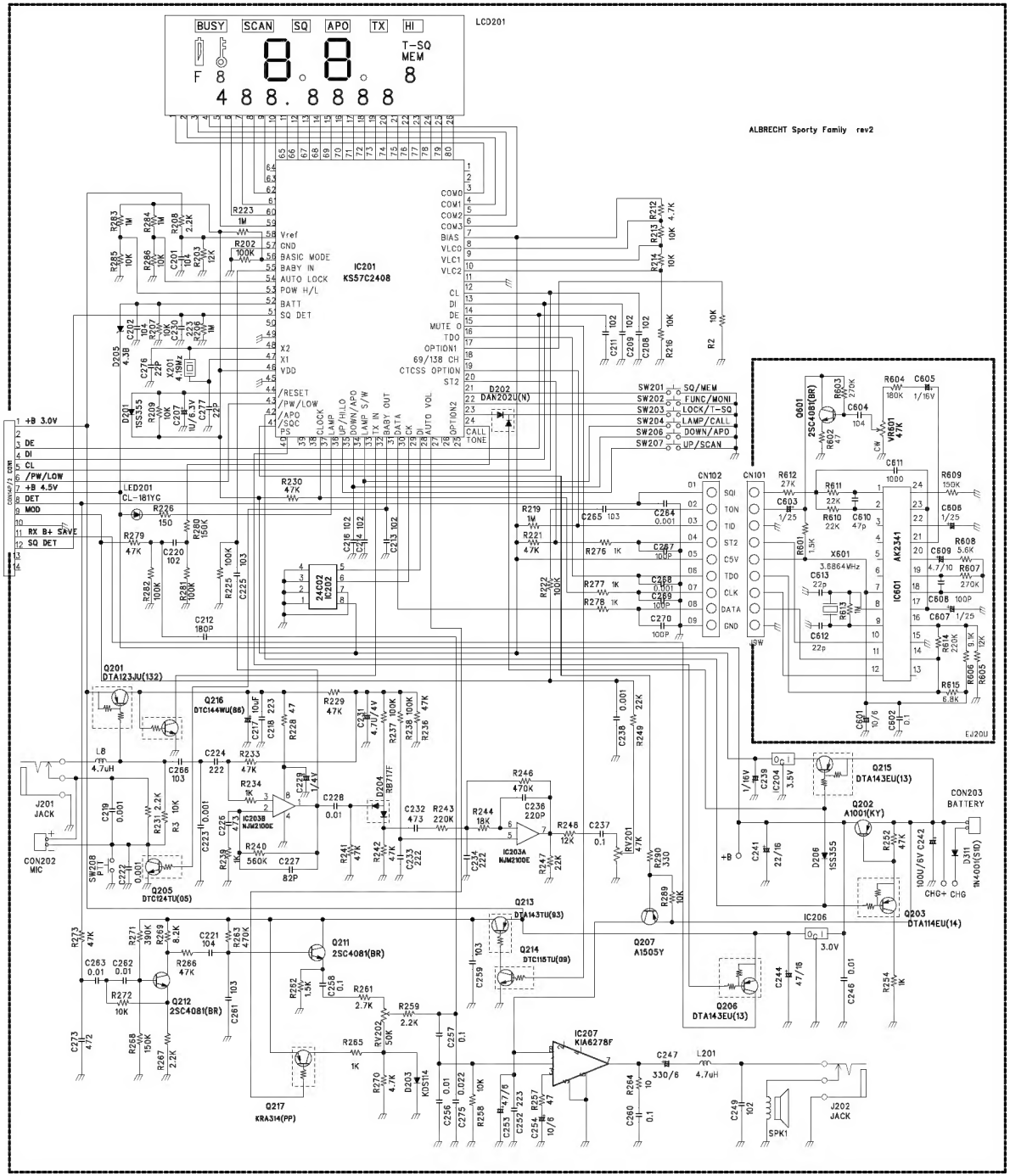
LCD201
BUSY
SCAN
SQ
APO
TX
HI
T-SQ
MEM
F 8
488.8888
ALBRECHT Sporty Family rev2
IC201
KS57C2408
Vref
GND
BASIC MODE
BABY IN
AUTO LOCK
POW H/L
BATT
SQ DET
COM0
COM1
COM2
COM3
BIAS
VLC0
VLC1
VLC2
CL
DI
DE
MUTE O
TDO
OPTION1
69/138 CH
CTCSS OPTION
ST2
/RESET
/PW/LOW
/APO
SQC
PS
X2
X1
VDD
CLOCK
LAMP
UP/HILO
DOWN/APO
S/W
TX IN
BABY OUT
DATA
AUTO VOL
OPTION2
CALL TONE
D202
DAN202U(N)
SW201 SQ/MEM
SW202 FUNC/MONI
SW203 LOCK/T-SQ
SW204 LAMP/CALL
SW206 DOWN/APO
SW207 UP/SCAN
CN102
SQI
TON
TID
ST2
C5V
TDO
CLK
DATA
GND
CN101
IC601
AK2341
X601
3.6864MHz
Q601
2SC4081(BR)
VR601
47K
EJ20U
LED201
CL-181YG
24C02
R202
Q201
DTA123JU(132)
Q216
DTC144WU(88)
Q205
DTC124TU(05)
IC203A
NJM2100E
IC203B
NJM2100E
Q211
2SC4081(BR)
Q212
2SC4081(BR)
Q213
DTA143TU(93)
Q214
DTC115TU(09)
Q217
KRA314(PP)
IC207
KIA6278F
Q207
A1505Y
Q206
DTA143EU(13)
Q215
DTA143EU(13)
Q202
A1001(KY)
Q203
DTA114EU(14)
CON203
BATTERY
CHG+ CHG
CON202
MIC
J201
JACK
J202
JACK
SPK1
IC206
3.0V